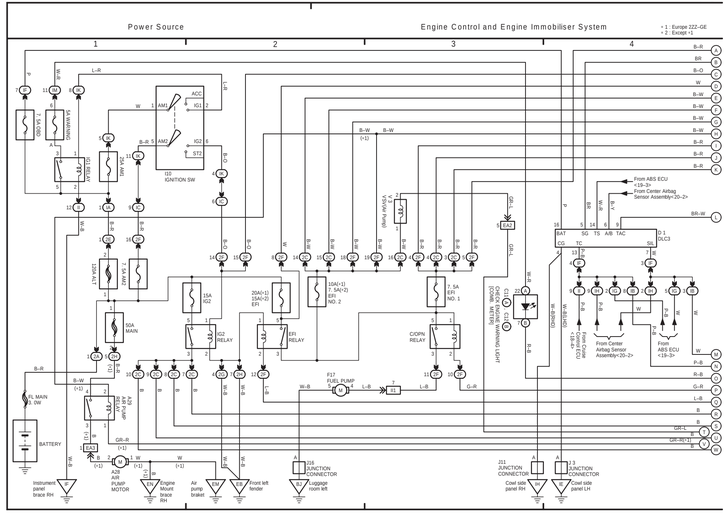
Power Source
Engine Control and Engine Immobiliser System
* 1 : Europe 2ZZ-GE
* 2 : Except <1
1
2
3
4
S.WARNING
ACC
IG1
IG2
ST2
AM1
AM2
ST1
IG1
IGNITION SW
EFI MAIN
EFI SUB
ECU-IG
IGN
ST1
C-ACT
L-ACT
15A
IG2
IG2
RELAY
20A(<1)
15A(>2)
EFI
EFI
RELAY
50A
MAIN
C/OPN
RELAY
7.5A
EFI
NO. 1
10A(<1)
7.5A(>2)
EFI
NO. 2
FL MAIN
1.0W
BATTERY
A28
FUEL PUMP
RELAY
A28
AIR
PUMP
MOTOR
F17
FUEL PUMP
From ABS ECU
<13>-2>
From Center Airbag
Sensor Assembly<25>-2>
To Tachometer
(Comb. Meter)
<23>-3>
D-2
DLC3
BAT
CG
TC
SG
TS
A/B
TAC
SIL
TACH
IGSW
BATT
+B
EXR1
VIS
ESO
EVO
THA
VS
TC
CG
SIL
CHECK
CONNECTOR
ODO METER
(COMBINATION METER)
From Center
Airbag Sensor
Assembly<25>-2>
From
ABS ECU
<13>-3>
Instrument
panel
brace RH
Front left
fender
J26
JUNCTION
CONNECTOR
Luggage
room left
Engine
mount
stays
RH
Air
pump
bracket
J21
JUNCTION
CONNECTOR
Cowl side
panel RH
J13
JUNCTION
CONNECTOR
Cowl side
panel LH

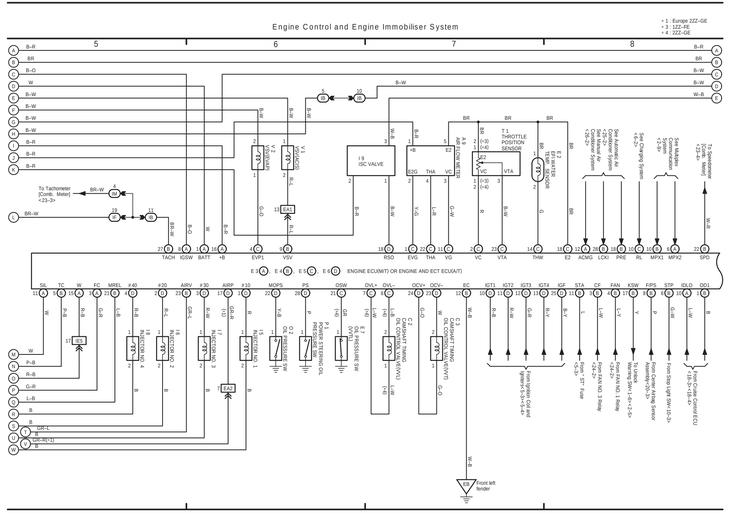
Engine Control and Engine Immobiliser System
* 1 : Europe 2ZZ-GE
* 3 : 1ZZ-FE
* 4 : 3ZZ-GE
5
6
7
8
I 9
ISC VALVE
T 1
THROTTLE
POSITION
SENSOR
To Tachometer
(Comb. Meter)
<23>-3>
ENGINE ECU(MT) OR ENGINE AND ECT ECU(AT)
Front left
fender

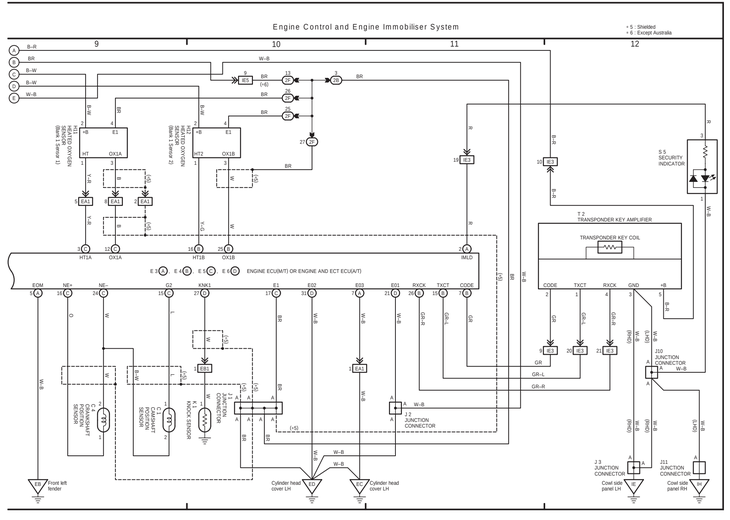
Engine Control and Engine Immobiliser System
* 5 : Shielded
* 6 : Except Australia
9
10
11
12
S 5
SECURITY
INDICATOR
T 2
TRANSPONDER KEY AMPLIFIER
TRANSPONDER KEY COIL
ENGINE ECU(MT) OR ENGINE AND ECT ECU(AT)
J 1
JUNCTION
CONNECTOR
J 2
JUNCTION
CONNECTOR
J 3
JUNCTION
CONNECTOR
J 4
JUNCTION
CONNECTOR
J10
JUNCTION
CONNECTOR
J11
JUNCTION
CONNECTOR
Front left
fender
Cylinder head
cover LH
Cowl side
panel LH
Cowl side
panel RH